Fuji Manufacturing Co. Ltd.

www.fujimanufacturingcoltd.com

15 Shinozuka, Fujioka,
Gunma 375-0017 JAPAN
TEL.(+81)274-22-2147
FAX.(+81)274-24-0074





Better, Better, and Better.

より良く、さらに良く、もっと良く。

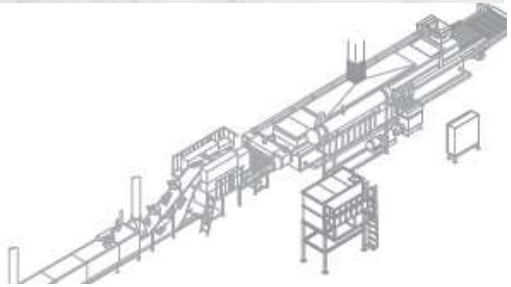





INDUSTRIAL MACHINERY & TECHNOLOGY

Fuji Manufacturing Co. Ltd.
www.fujimanufacturingcoltd.com

Fuji's feature and Strength

History

FUJI was established in 1964, then we have more than 61 years long history and experience.

Fuji Manufacturing Co. Ltd.
www.fujimanufacturingcoltd.com

Fuji's feature and Strength

Company scale

FUJI is **the pioneer & the largest company** in the industry of instant noodle making plant.

生産ラインの高度自動化を実現する
FUJIの即席めんプラント

Fuji Instant Noodle Plants Provide Advanced Production Line Automation

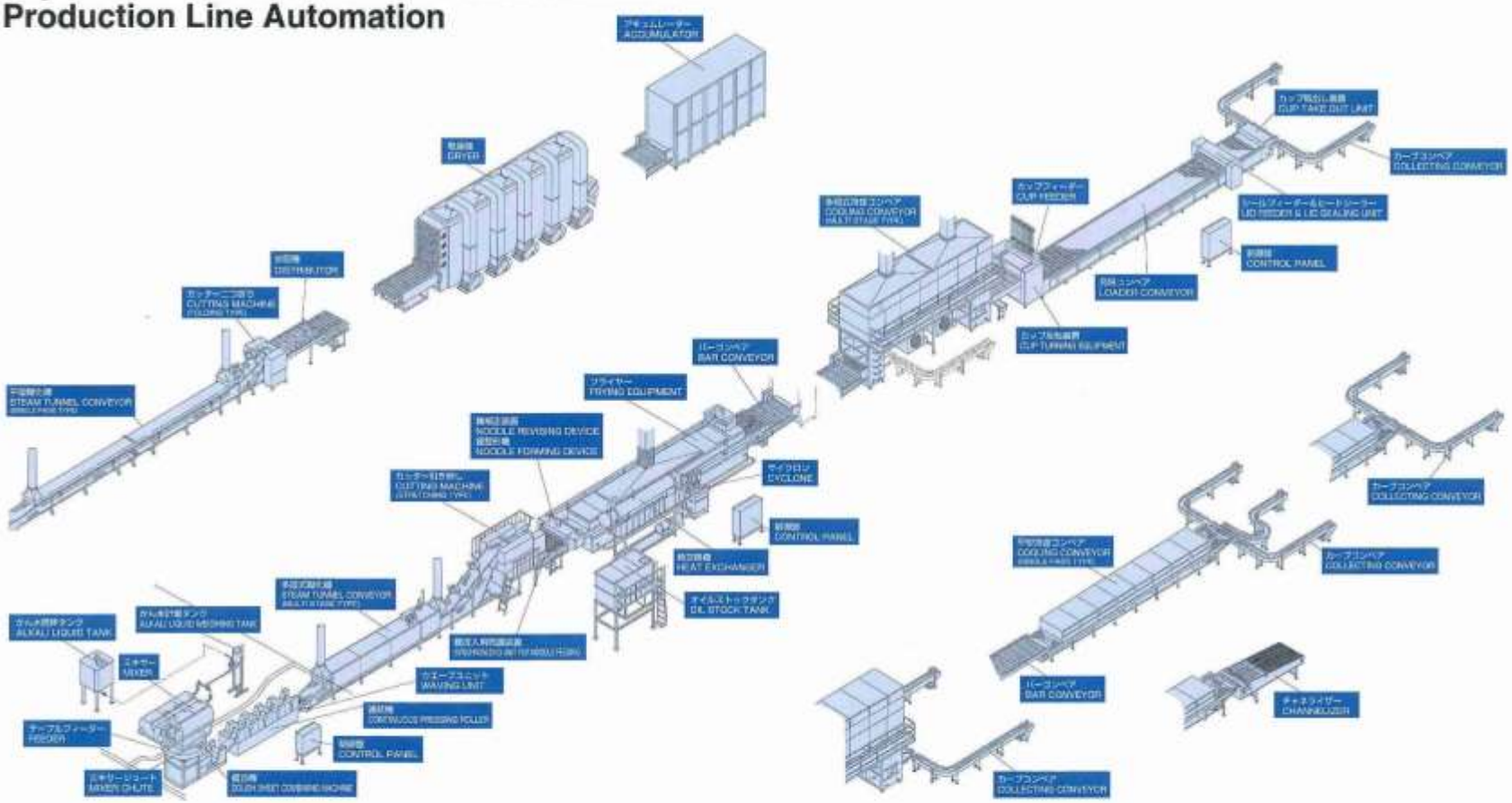

Fuji Manufacturing Co., Ltd.

Creating a food culture from the gifts of nature and the sun

太陽と自然の恵みを大切に。明日の食文化をクリエイト

Fuji Manufacturing Co. Ltd.
www.fujimanufacturingcoltd.com

Fuji's feature and Strength

Market Share

FUJI have over **50%** market share in both Japanese market and global market.

Fuji Manufacturing Co. Ltd.
www.fujimanufacturingcoltd.com

Fuji's feature and Strength

Actual Record

FUJI have ever manufactured many plants and exported into about more than **50 countries** in the world. FUJI have ever installed approx. more than **900** lines into oversea countries.

Fuji Manufacturing Co. Ltd.
www.fujimanufacturingcoltd.com

Fuji's feature and Strength

BRANDS USING OUR MACHINES













- **Indomie using more than 190 lines**

Fuji Manufacturing Co. Ltd.
www.fujimanufacturingcoltd.com

Fuji's feature and Strength



List of World clients 海外納入実績

Asia

Southeast Asia

Cambodia	NVC corporation
	President Foods Cambodia Co., Ltd.
Indonesia	Kurnia Sari
	PT Dellifood Sentosa Corporetion
	PT Indofood Sukses Makmur
	PT Jakarana Tama
	PT Karunia Alam Segar
	PT Khong Guan Biscuit Factory
	PT Nissinmas
	PT Radiance
	PT Sampindo
	PT Sentrafood Indonusa Corporation
	PT Siantar Top
Malaysia	Bestcan Food Technological Industry Sdn.Bhd.
	Nestle (Malaysia) Berhad
	Indofood (M) Food Industries Sdn. Bhd.
	Khaw Tai Food Ind.Sdn Bhd.
	Pacific Food Products Sdn.Bhd.
	Sarawak Biscuit and Food Sendirian Berhad
	Spices & Seasonings Specialities Sdn Bhd
Myanmar	Capital Diamond Star Group
	Hein Si Group
	Yathar Cho Industry Ltd.
Philippines	Monde Nissin Corporation
	Nissin-Universal Robina Corporation
	RFM-Indofood Philippiness Corporation
	Universal Robina Corporation
	Zest·O Corporation
Singapore	Meiji Seika (Singapore) Pte.Ltd.
	Nestle R&D Center (Pte) Ltd.
	Nissin Foods Singapore Pte. Ltd.
	Prima Limited
	Tat Hui Foods Pte Ltd.
Thailand	Thai Preserved Food Factory Co.,Ltd.
	Thai President Foods Co.,Ltd.
	Wan Thai Foods Industry Co.,Ltd.
Vietnam	Acecook Vietnam Joint Stock Company
	Asiafood Industry Co.,Ltd.
	Asia Food Technology JSC
	Masan Industrial Corporation(MSI)
	Miliket Food and Foodstuffs Enterprise
	Thien Huong Food Joint Stock Company
	Vietnam Food Industries Joint Stock Company

East Asia

China	Beitek Foods Co.,Ltd.
	Baixiang Food
	Nissin Foods Products Co.,Ltd.
	Suzhou Mamee-Double Decker Foods Co.,Ltd.
	Ting Hsin International Group
	Thai Hin Long Group
	Zhuhai Golden Coast Winner Food Products Ltd.
	Zhuhai Huafeng Group
Hong Kong	Nissin Foods Co.,Ltd.
	Winner Food Products Limited
Korea	Nongshim Co., Ltd.
	Sam Yang Foods Co.
Taiwan	King Car Food Industrial Co.,Ltd.
	President Enterprises Corp.
	The Oyatsu Company Taiwan Limited.
	Ve Wong Corporation
	Vedan Enterprises Group
	Wei Lih Food Industrial Co.,Ltd.

Middle East and West Asia

Saudi Arabia	Pinehill Arabia Food
Syria	Salim Wazaran Brinjikji Limited
Yemen	Salim Wazaran Hilabi Co. Ltd.

South Asia

Bangladesh	Elfan Foods Limited
	Kallol-Thai President Foods (BD) Ltd.
	Olympic Industries Limited

Fuji Manufacturing Co. Ltd.
www.fujimanufacturingcoltd.com

Fuji's feature and Strength

India	Balaji Wafers Pvt. Ltd.
	Indo Nissin Foods Limited
	Meiji India Private Limited
	Nestle India Limited
	Swasth Aahar Private Limited (A unit of Patanjali)
Nepal	CG Foods (Nepal) Pvt.Ltd.
	General Foods Industries
	Himalayan Hygienic Snax & Noodles (P) Ltd.
	Himshree Foods Western Nepal Limited
Pakistan	Nestle Pakistan Limited
Sri-Lanka	Ceylon Agro Industries Limited
	Nikado Company Ltd.

Africa

Egypt	Salim Wazaran Abu Alata
Ethiopia	Salim Wazaran Yahya Food Manufacturing Plc
Ghana	Blow Chem Industries Limited
Kenya	Salim Wazaran Kenya Co. Ltd.
Nigeria	Dufil Prima Foods Plc Nig.
	Flour Mills of Nigeria Plc
	Olam Sanyo Foods Limited
	Primera Food Nigeria Ltd.
South Africa	Nestle (South Africa) (Pty) Limited
Sudan	Salim Wazaran Bashary Food (SawaBash) Co. Ltd.

Oceania

Australia	Nestle Foods
	San Remo Macaroni Company Pty.Ltd.
Fiji	Nestle Fiji Ltd.
New Zealand	Nestle New Zealand Limited
Papua New Guinea	Lae Biscuit Co. Ltd.
	Nestle (PNG) Pty.Ltd.

South America

Argentina	Nestle Argentina S.A.
Brazil	Gama Sucos E Alimentos
	J. Macedo
	Lua Nova Industria e Comercio de Produtos Alimenticios Ltda.
	M.Dias Branco Ind.e com.de Alimentos Ltda.
	Nestle Indl.e Coml.Ltda.
	Nissin Foods Do Brasil Ltda.
	Pastificio Selmi S.A.
Peru	Ajinomoto Del Peru S.A
Venezuela	Anchor International.

North America

Canada	Encore Gourmet Food Corp
Guatemala	Grupo Buena
Mexico	Nissin Foods De Mexico S.A. De C.V.
USA	Meiji America Inc.
	Nissin Foods
	Roya Foods Inc.
	Sanyo Foods Corp. of America

Europe

UK	Premier Foods
	Unilever UK
Poland	Ajinomoto Poland Sp. z o. o.
Russia	King Lion Foods Co.,Ltd.
	Kukhnya Bez Granits (KBG)
Serbia	Indoadriatic Industry D.O.O
Switzerland	Nestle R&D Center Kemptthal
Turkey	Acarsan Holding
	Adkoturk Gida Sanayi Ve Ticaret Limited
Ukraine	KBG (Kukhnya Bez Granits) Holding Ltd.
	Nestle Ukraine LLC

Fuji's feature and Strength

Bangladesh Market

Fuji is the first machine supplier of Bangladesh Noodles Manufacturer, **Brand name was "FUJI" by Erfan Foods Limited.**

Our valued Bangladesh customers are :

- **Erfan Foods Limited**
- **Kallol-Thai President Foods (BD) Ltd.**
- **Olympic Industries Limited**
- **Meghna Noodles and Biscuits Factory Ltd.**

Fuji Manufacturing Co. Ltd.
www.fujimanufacturingcoltd.com

BANGLADESH NOODLES
MARKET SCENARIO

	Monthly	Yearly
Total market Ton	7931	95,175
Total market Revenue	317.3	3,807
Market Growth Rate	12%	
Organized (Crore)	92%	258
Unorganized (Crore)	8%	59
		317
Per Kg DP	**400tk**	

Fuji Manufacturing Co. Ltd.
www.fujimanufacturingcoltd.com

BANGLADESH NOODLES MARKET LEADERS BY REVENUE

Stick Noodles Market Share		
	BDT in Core	Market Share
Cocola Stick Noodles	24.85	39.8
MGI (Fresh stick noodles	2.57	4.1
Mr. noodles stick noodles	2.52	4.0
Doodles	2.8	4.5
Meridian	1.8	2.9
ACI Stick Noodles	2.3	3.7
Dekko Foods	1.63	2.6
Sajib Corporation	1.5	2.4
Kishwan	1.45	2.3
Others	21	33.6
	62.42	**100.0**

Fuji Manufacturing Co. Ltd.
www.fujimanufacturingcoltd.com

BANGLADESH NOODLES MARKET LEADERS BY REVENUE

Instant Noodles Market Share		
	BDT in Core	Market Share
Pran Mr. Noodles	87	34.1
Maggi Instant Noodles	65	25.5
MGI (Fresh stick noodles	26.0	10.2
Olympic Foodie and Fundos	18	7.1
Mama Noodles	13	5.1
Chopstick	12	4.7
Doodles	11	4.3
Cocola	7	2.7
Ifad	2	0.8
Kishwan	1.83	0.7
Others	12	4.7
	254.83	100

BANGLADESH MARKET SHARE BY GROUP AND SEGMENT

Market Share by Group		
	Organized	Unorganized
Instant Noodles	95.00	5.00
Stick Noodles	67.00	33.00

Fuji Manufacturing Co. Ltd.
www.fujimanufacturingcoltd.com

Fuji's feature and Strength

Total proposals

FUJI can offer **total solution** by proposing and manufacturing a chain of machines for production of all types of instant noodles, **bag type, cup type and fried, non fried noodles.**

Fuji Manufacturing Co. Ltd.
www.fujimanufacturingcoltd.com

Fuji’s feature and Strength

Custom-made

FUJI’s machines are completely custom-made to meet each customer's requirement and needs.

Fuji Manufacturing Co. Ltd.
www.fujimanufacturingcoltd.com

Fuji's feature and Strength

Made in Japan

FUJI's machines are 100% made in Japan **for high quality and performance and durability.**

Fuji Manufacturing Co. Ltd.
www.fujimanufacturingcoltd.com

Fuji's feature and Strength

Flexibility in development and technology

FUJI has **R&D Dept. and pilot plant and machines for testing.** We can cooperate with customers in developing new products.

Fuji's feature and Strength

Comparisons with competitors

- Higher Durability
- Higher Productivity
- Higher Performance
- Highly Automated
- Energy Savings
- Labor Saving

Fuji's feature and Strength

Comparisons with competitors

Fuji have a lot of accumulated experience, skill, knowledge and know-how on instant noodle making plant and instant noodle product.

We can provide our customers with not only the best plant but also the most suitable advice and skill for instant noodle production to improve productivity, production efficiency, production process or to raise the production yield or to make the operation and maintenance easier.

*That means we can give our customers **both hardware and software** for the instant noodle production.

Fuji's feature and Strength

Special features we offered

1)Automatic dough sheet transfer conveyor included in Roller machines

2)Detachable packing for insulation panel of Steamer

3)Motorized knocker for Pre-dryer and Fryer

4)Pre-Dryer

5)Guide pulse type level sensor for Fryer

6)Inclined outlet conveyor of Fryer

7)Continuous type oil filter for Fryer

8)Metal detecting conveyor between Roller machines

Fuji Manufacturing Co. Ltd.
www.fujimanufacturingcoltd.com

Fuji's feature and Strength

AUTOMATIC DOUGH SHEET TRANSFER CONVEYOR

Dough Sheet Can be passed into each roll automatically by this conveyor without manual handling at starting time of production. That can lead to safety and burden reduction of operation

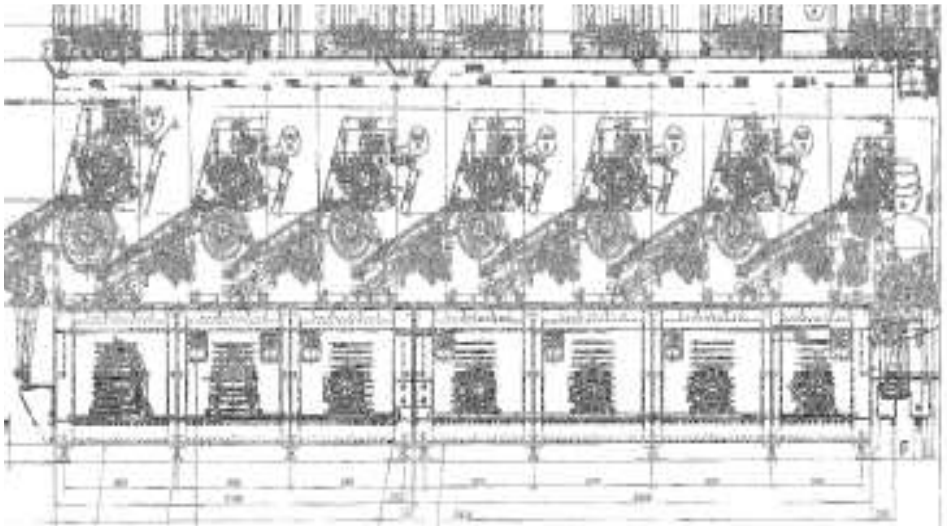



Fuji's feature and Strength

DETACHABLE PACKING FOR STEAMER

Steamer packing detachable for easy replacement,

Replacement of packing adhered with silicone caulking requires a lot of time and labor, however in case of detachable packing, it is designed and manufactured as possible to without caulking.

Advantage
>Saving time and labor for replacement
>Good looking without caulking





Fuji Manufacturing Co. Ltd.
www.fujimanufacturingcoltd.com

Fuji's feature and Strength

MOTORIZED KNOCKER FOR FRYING EQUIPMENT

Knocker vibrate baskets to correct noodle feeding condition in basket at the inlet of Frying equipment. This knocker rotates by inverter motor and rotation speed in variable. By changing frequency of motor, optimal correction is possible according to various noodle feeding conditions.

Advantage
>Production yield can be impro
>Possible to correct(adjust) according to various noodle feeding conditions

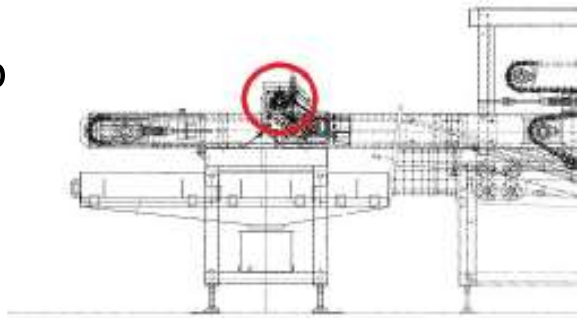

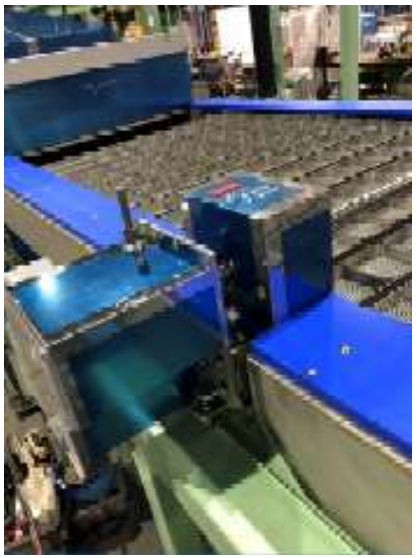

Fuji's feature and Strength

PRE-DRYER

Pre-Dryer is installed in front of fryer to dry the noodles with hot air for several minutes before frying. By reducing the moisture content of noodles before frying, oil content of noodle can be reduced.

Reduced oil consumption can reduce operating costs.



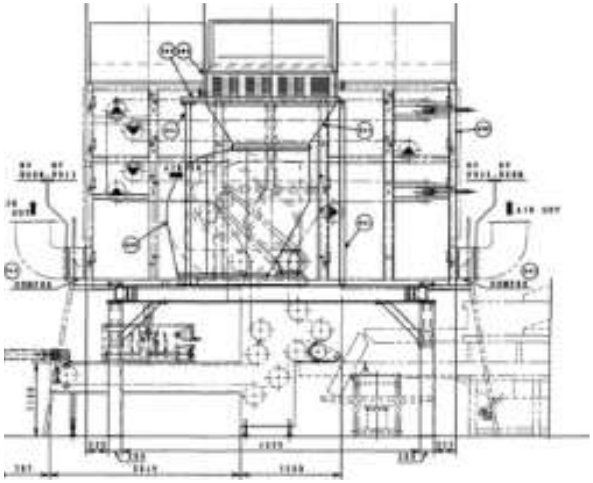

Fuji Manufacturing Co. Ltd.
www.fujimanufacturingcoltd.com

Fuji's feature and Strength

GUIDE PULSE TYPE LEVEL SENSOR

Height of oil level of fryer can be accurately detected and controlled. Set value and current value can be viewed on a digital monitor. It also can be used to detect any liquid such as alkali liquid.

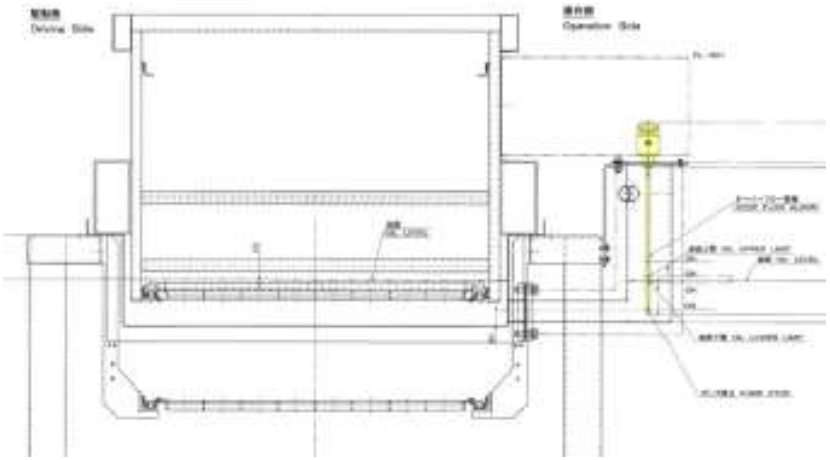





Fuji's feature and Strength

INCLINED OUTLET CONVEYOR IN FRYING EQUIPMENT

By Inclined structure at outlet part of Frying equipment, removal of extra oil from noodle cake can be improved because of the 4 reasons mentioned below :

1. Time for noodle cakes to be transferred from frying pan into bar conveyor can be longer.
2. Extra oil can drop down from noodle cakes or baskets easily because of inclined structure
3. Scraper set at outlet part of the frying equipment can help extra oil to be removed from noodle cakes or baskets
4. Oil collection tray to prevent extra oil from dripping down on noodle cakes can be installed because of inclined structure.

Fuji Manufacturing Co. Ltd.
www.fujimanufacturingcoltd.com

Fuji's feature and Strength

INCLINED OUTLET CONVEYOR IN FRYING EQUIPMENT

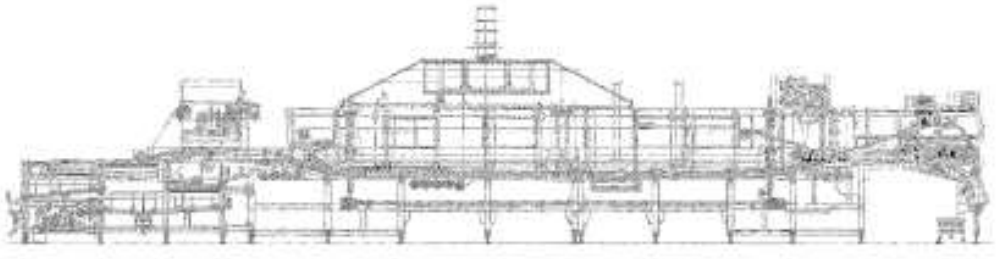

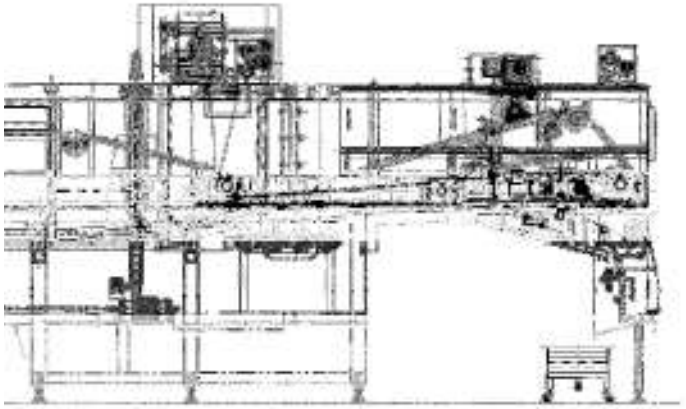



Fuji's feature and Strength

CONTINUOUS TYPE OIL FILTER (OIL STRAINER WITH CONTINUOUS FILTER)

Screen and filter paper continuously filter the oil during production. The filter paper removes small noodle dregs that cannot be removed by screen for prevention of oil deterioration and improvement of product quality.

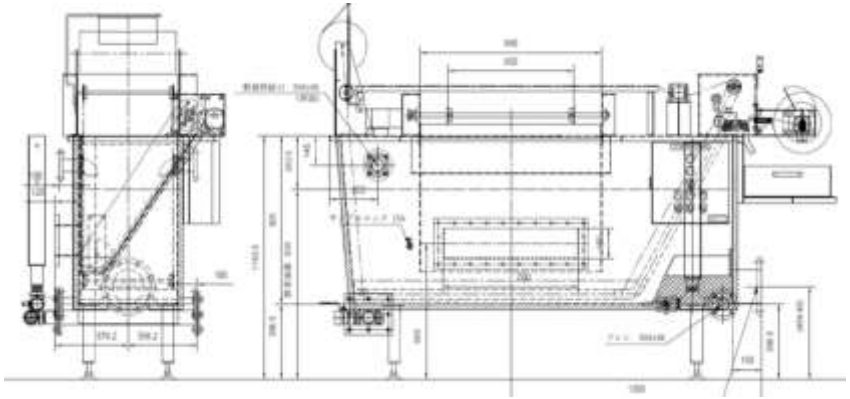



We hope to have a chance to work with you and become the business partner of the BEST TEAM in Bangladesh.

